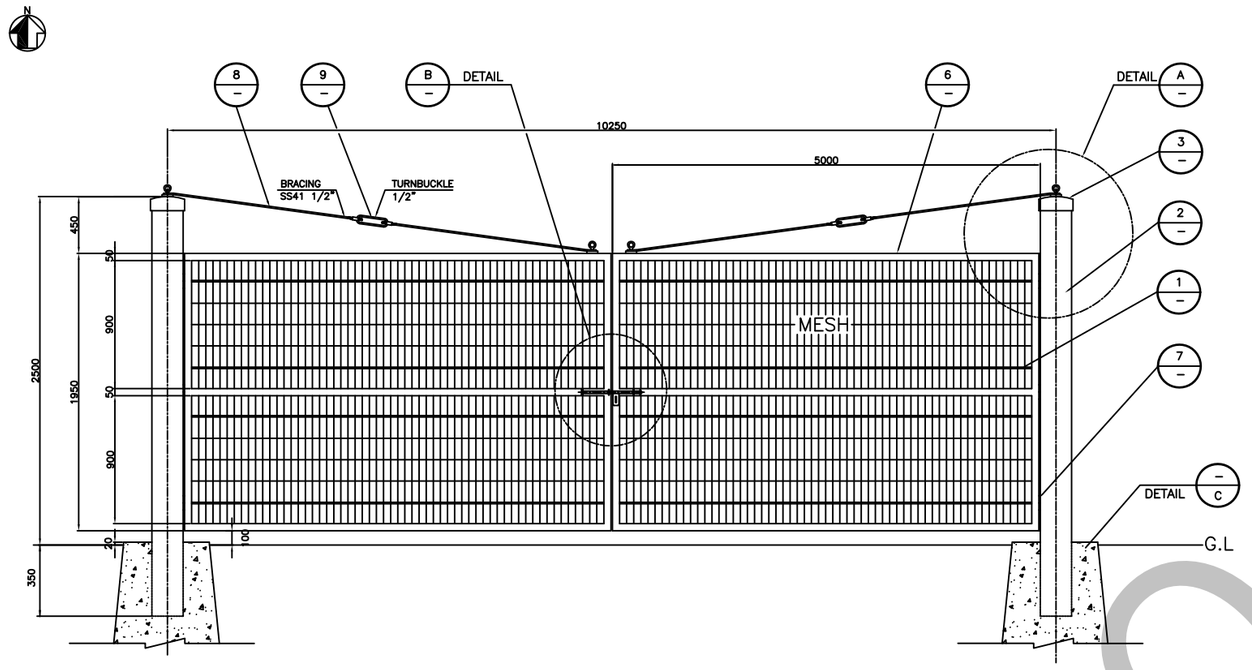

EXPTRIOR ELEVATION 001

AT WIRE MESH SWING GATE
SCALE : 1 / NONE

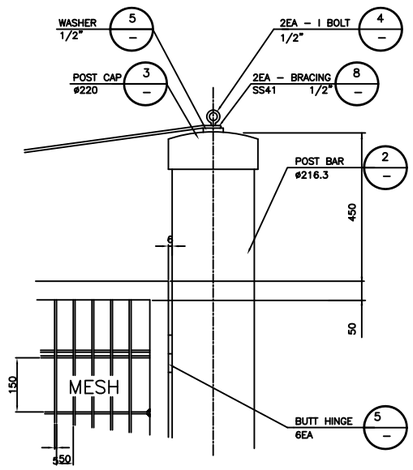

DETAIL A
S : 1/10

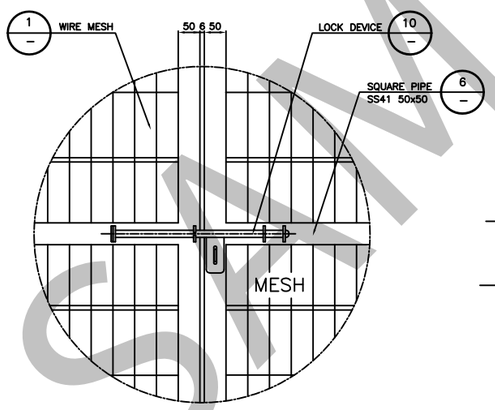

DETAIL B
S : 1/10

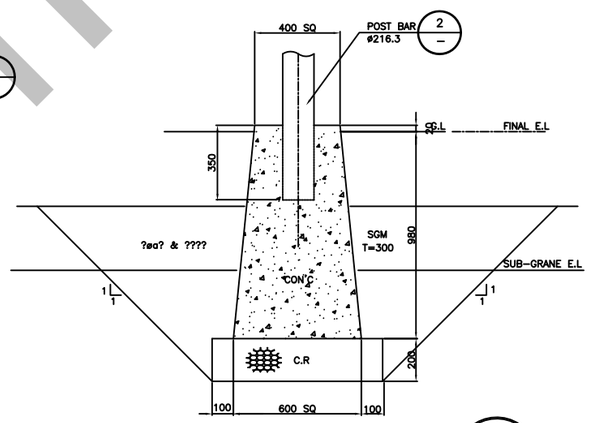

CONCRETE WALL POST
S : 1/10

BILL OF MATERIALS

NO.	MK	DESCRIPTION	LENGTH	Q'TY	MAT'L	WEIGHT(Kg) UNIT	WEIGHT(Kg) TOTAL	REMARKS
WIRE MESH SWING GATE								
1		MESH FENCE		19.5㎡	SS41			
2		POST BAR	ø200	2	SCH30	102.9	205.8	
3		POST CAP	ø210	2	SS41			
4		I – BOLT	1/2"	2				
5		WASHER	1/2"	2	SS41			
6		SQUARE PIPE	□ 50X50	40M	SS41		144.4	
7		BUTT HINGE		6	SS41			
8		BRACING	1/2"x245L	4	SS41			
9		TURN BUCKLE	1/2"	2				
10		LOCK DEVICE		1	SS41			
11		FLOOR STOP		2				

NOTE

1.GATE STRUCTRAL STEEL CONFORM TO SS41.

2.GENERAL SPEC FOR SEE.
SAM HOON TECHINICAL SPECIFICATIONS (STP–001. REV.1)

3.EACH GATE ASSEMBLY SHALL BE PROVIDEO WITH A COMPLETE SET OF EMERGENCY SPARE PARTS INCLUDING.
A. BUTT HINGE
B. LOCK DEVICE

4.COATING WORK
A. FIRST COAT SHALL BE AS FOLLOWS ;

MANUFACTURER	SYSTEM	PRIMER (THK)
CARBOLINE CO.	893	(3 ~ 5 mils)

B. FINISH COAT : BY OTHERES
(MUNSELL COLOR NOTATION ; TABLE 4G2)

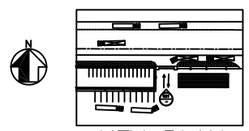

KEY PLAN
S : 1/1050

OPENING TYPE

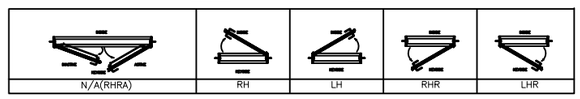

SAMHOON ENGINEERING CO.,LTD.

SAMHOON CO,. LTD.
#256 Kyungin–Ro,
Bucheon City, Gyeonggi Drovince, Korea
TEL:(82)–32–661–3501/FAX:(82)–32–661–3505
http//:www.samhoon.com E–Mail:samhoon@samhoon.com

REV	DATE	DESCRIPTION	BY	CHKD	APPRD	REFERENCE DRAWINGS
0	15.JAN.24	ISSUED FOR DRAWING	S.H.KIM	J.S.KIM	J.S.MOO	CONTENT OF NOTES

CAD FILE REF.	SHEET NO.	SCALE
주식회사 세광종합기술단	SAMHOON– 021	N/S

TITLE :
WIRE MESH SWING GATE ASSEMBLY

A3